BUILDING ENCLOSURE INVESTIGATION AND ANALYSIS
CENTENNIAL CONDOMINIUMS
ASPEN, CO

Date:

2011.01.26

Prepared For:

Stephen W. Bossart
Project Manager
Capital Asset Department
City of Aspen

Prepared By:

Peter Baker, P.Eng.
Senior Associate
Building Science Corporation

Cathy Gates, AIA
Associate
Building Science Corporation

30 Forest Street | Somerville, MA 02143 | Phone 978.589.5100 | Fax 978.589.5103 | www.buildingscience.com

Contents

Contents 2
List of Figures 3
Introduction 4
Description of Building Complex 4
Reported History 4
Observations 6
Attic/Roof 6
Exterior Walls 8
Crawlspace 13
Analysis 16
Attic/Roof 16
Exterior Walls 17
Wall to Lower Sloped Roof Connection 18
Second Floor Balcony Additions 18
Window Systems 19
Crawlspace 19
Recommendations 19
Attic/Roof 20
Option 1: Increase ventilation and air seal the attic floor 20
Option 2: Modify the attic to be an unvented attic 20
Additional recommended work 20
Exterior Walls 20
Window and Patio Door Systems 22
Crawlspace 23
Cantilevered Decks 23

30 Forest Street | Somerville, MA 02143 | Phone 978.589.5100 | Fax 978.589.5103 | www.buildingscience.com

List of Figures

Figure 1: 300 Free Silver Ct Southwest (from west) 43
Figure 2: 200 Teal Ct Northeast (from north) 43
Figure 3: Porch Exterior Wall (photo courtesy of REG) 63
Figure 4: South Header (photo courtesy of REG) 63
Figure 5: Typical first floor sill plate at east wall of 314 (photo courtesy of REG) 63
Figure 6: LVL beam supporting cantilever of unit above unit 314(photo courtesy of REG) 63
Figure 7: Ventilation Shaft Section 73
Figure 8: Ventilation Shaft 73
Figure 9: Ventilation Shaft and Attic Vents 83
Figure 10: Attic Vent from Interior 83
Figure 11: Attic condensation stains 83
Figure 12: Attic condensation stains at dryer vent 83
Figure 13: Exterior Wall Section 93
Figure 14: SE wall with storage closet 93
Figure 15: Investigation of SE wall 93
Figure 16: Investigation at roof/wall connection 93
Figure 17: Investigation at wall/wall connection 103
Figure 18: Investigation at base of wall 103
Figure 19: SW porch deck 103
Figure 20: SW porch with added “support” 103
Figure 21: Example of deck over storage closet 113
Figure 22: SW porch with added 113
Figure 23: Wing wall built over existing structure 113
Figure 24: Wing wall attachment to building 113
Figure 25: Investigation at NE wall at roof/wall 123
Figure 26: Detail at roof/wall 123
Figure 27: Investigation at NE wall (field) 123
Figure 28: Investigation at SW wall (field) 123
Figure 29: Investigation at window (SE wall) 133
Figure 30: Investigation at window (NE wall) 133
Figure 31: Basement Ventilation Section 133
Figure 32: Exterior Basement Vents 133
Figure 33: Piping in Basement 143
Figure 34: Rim board 143
Figure 35: Foundation wall 143
Figure 36: Foundation wall insulation 143
Figure 37: Poly ground cover at lally column 153
Figure 38: Poly ground cover sealed to wall insulation 153
Figure 39: Deteriorating sill plates in 300 building crawl (photo courtesy of REG) 163
Figure 40: Deteriorating sill plates in 300 building crawl (photo courtesy of REG) 163
Figure 41: Water staining on LVL beam (photo courtesy of REG) 163
Figure 42: Insulation falling out of floor joists (photo courtesy of REG) 163
Figure 43: Rake edge at end wall and eave overhang extension 173
Figure 44: Foundation wall section 183
Figure 45: Base of wall at foundation wall ledge 183

Introduction

Building Science Corporation was retained by the City of Aspen to investigate water intrusion concerns related to the enclosure assemblies at the non-rental unit buildings at Centennial Housing in Aspen, CO. The non-rental buildings are 100 - 400 Free Silver Court and 200 - 400 Teal Court. BSC's investigation consisted of a review of the construction documents and details of the buildings and a site review of the buildings during which isolated intrusive disassembly was performed for investigation purposes.

Description of Building Complex

The complex consists of 7 buildings. Each building consists of a series of blocks or sections which are offset from each adjacent module by either 12 or 18 feet. On the southwest elevation, in each block, the outer wall for each floor steps back from the lower floor and the roof on each floor slopes down towards the façade. The outermost part of the first floor on the southwest elevation consists of a covered porch with a storage closet on one side. (See Figure 1~~Figure 1~~) In some cases, the roof for the covered porch and storage area has been replaced with a 2nd story deck. On the northeast elevation, at each block, the roof slopes to the side with a vertical wall marking the transition to the sloping roof on the southwest. The roof conditions at the ends of the buildings vary (See Figure 2~~Figure 2~~). Thus in general, on the southwest side of the buildings, there are roof/wall connections on the southeast or northwest facing walls whereas on the northeast side of the buildings, the roof/wall connections occur primarily on the northeast walls.

Figure 1: 300 Free Silver Ct Southwest (from west)

Figure 2: 200 Teal Ct Northeast (from north)

Reported History

The buildings were constructed in the 1980's. The buildings are wood-framed with horizontal ship-lap redwood siding on all walls and standing seam metal roofs. There is a continuous crawl space underneath the buildings.

At the time of construction, the second floor decks on the southwest side of the buildings in the original design were deleted from the project. These decks had been designed to extend over the first floor porch and exterior storage closets. Instead, a sloped roof was constructed over these storage closets. A number of second floor homeowners have subsequently added decks to their units.

Several years after construction, some structural damage caused by water intrusion was discovered at one of the windows on the southeast elevation of one of the buildings. In order to better protect the walls from water, metal overhangs were inserted on the ends of the sloped roofs. Kick-out metal flashing was also added at the lower edge of some of the roof/wall intersections.

The most common complaint of water intrusion made by homeowners has been that water gets into the wall of the exterior storage units on the southeast side of the building. It was reported that this situation is at its worst when there is snow on the roof that starts to melt.

A partial renovation was completed in August of 2009. The initial cause of the retrofit was due to a broken waste pipe within one of the second floor party walls. While the repairs were being made, the contractor noted that there was significant water damage in the extension of that wall where it becomes an exterior wall. The scope of the repair was increased to include the damage found in the exterior walls. The following observations were reported to BSC by August Hasz of REG:

- The repairs were done on most if not all of the south wall of both levels, the full length of the wall affected (west facing), plus on the north end of the unit the north and east facing walls.
- During this work most of the studs, plywood sheathing, exterior gypsum board sheathing, insulation, structural headers etc. were found to be mostly rotten and needed to be replaced.
- While working on the west facing wall on the north end of the lower unit, the mold and rot was observed be in the partition wall that adjoins the exterior wall, the adjoining flooring was rotted and had buckled. This was not near the waste pipe link and was unrelated. It appears this damage was from water that had penetrated from the exterior wall, and then migrated into the floor system and partition wall.
- The sill plate at the east facing wall (north side of the unit) was completely rotted out.
- To complete this 'exterior wall' scope of work, the kitchen and bathroom both had to be almost completely removed because of the moisture damage to the floor system and partition wall.
- The damage at the south wall was extensive. This needs to be verified, but I don't believe this is a unit with any changes to the south wall (i.e. no porch was added to the unit above). Yet the header above the south door was damaged and starting to get crumbly. This entire wall was rebuilt, again no relation to the waste pipe damage.
- The siding that was removed was brittle and not salvageable in any significant quantity.

30 Forest Street | Somerville, MA 02143 | Phone 978.589.5100 | Fax 978.589.5103 | www.buildingscience.com

Figure 3: Porch Exterior Wall (photo courtesy of REG)

Figure 4: South Header (photo courtesy of REG)

Figure 5: Typical first floor sill plate at east wall of 314 (photo courtesy of REG)

Figure 6: LVL beam supporting cantilever of unit above unit 314 (photo courtesy of REG)

Observations

BSC conducted a site review of the buildings on June 30, 2010. The site review was conducted by Peter Baker and Cathy Gates of BSC. Present during the site review were Stephen Kanipe, Scott Miller, Jeff Pendarvis, Lee Cassin, and C.J.Oliver of the City of Aspen, Travis Beard of First Choice Properties, Mike Van Dyke of National Jewish Health, and Arlen Wussow of Rudd Construction.

A survey of the exterior of the buildings was conducted. Several openings were cut to examine the underlying conditions at representative locations. A survey of one attic space (321 Free Silver Ct) and a survey of the southeast end of the crawl space under 300 Free Silver Ct were also conducted.

Attic/Roof

The attic is designed to be ventilated. There is one ventilation chimney/shaft at one end of each block. Each chimney serves as a vent for the two adjacent attics. (See Figure 7~~Figure 7~~ and Figure 8~~Figure 8~~) Attic vents are located in the end walls on the northwest elevation just above the attic floor (see Figure 9~~Figure 9~~) and on the exposed sides (southwest or northeast) on the other side of the building. In Figure 9~~Figure 9~~, the two vents in the foreground (above the windows) are the

30 Forest Street | Somerville, MA 02143 | Phone 978.589.5100 | Fax 978.589.5103 | www.buildingscience.com

attic vents. The two higher vents in the background are used for dryer vents. In the surveyed attic, there is a separation wall between the two vents which separates attic space in the block into 2 separate spaces.

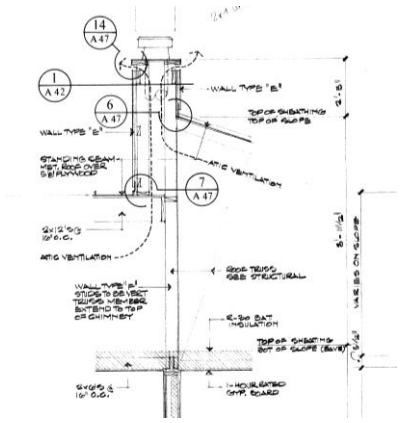

Figure 7: Ventilation Shaft Section

Figure 8: Ventilation Shaft

The surveyed attic was accessed via a pull-down stair. The access hatch was not gasketed; it had been taped shut by the homeowner for air-sealing. In the attic, only one vent was observed (Figure 10~~Figure 10~~). There may have been another similarly sized vent along the side wall on the southwest end of the attic.

There was no observed evidence of water intrusion in the attic. However, there were multiple locations of condensation staining on the framing close to the roof or exterior wall sheathing (See Figure 11~~Figure 11~~). Evidence of condensation was most significant near the dryer vent attachment to the exterior wall (See Figure 12~~Figure 12~~).

30 Forest Street | Somerville, MA 02143 | Phone 978.589.5100 | Fax 978.589.5103 | www.buildingscience.com

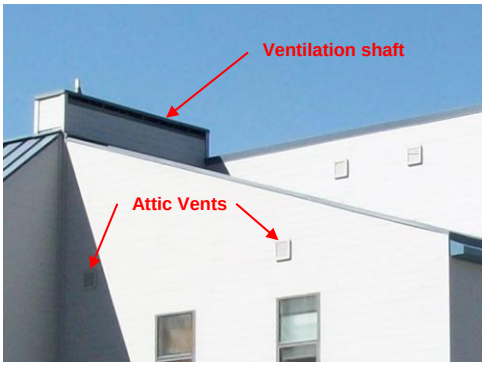

Figure 9: Ventilation Shaft and Attic Vents

Figure 10: Attic Vent from Interior

Figure 11: Attic condensation stains

Figure 12: Attic condensation stains at dryer vent

[Aren't the condensation stains more accurately described as evidence of mold?]

While there was a bathroom with an operating ventilation fan located directly below the attic, there was neither a vent nor a duct for it observed in the attic. It was reported that at the time of construction, the local code did not require that bathroom fans be ducted to the exterior. Therefore, it is assumed that the bathroom fan vented either into an interior second floor wall or into the floor of the attic.

During the exterior wall survey, a cut was made from the exterior into an attic wall for one of the units in 200 Free Silver Court. It was observed that the attic wall was insulated and then covered with a layer of polyethylene. At another location in that building, when the exterior vent cover was removed for one of the lower attic vents, it could be seen that the opening was being used as a duct termination rather than for attic ventilation. These observations suggest that the lower attic vents in some of the units have been blocked by homeowners.

Exterior Walls

The exterior walls of the buildings are constructed with a layer of exterior gypsum board on the exterior side of the plywood wall sheathing as part of a 1-hour fire rated assembly. The shiplap horizontal siding is applied directly over the gypsum board. (Figure 13~~Figure 13~~) There is a layer of polyethylene applied on the interior side of the studs.

30 Forest Street | Somerville, MA 02143 | Phone 978.589.5100 | Fax 978.589.5103 | www.buildingscience.com

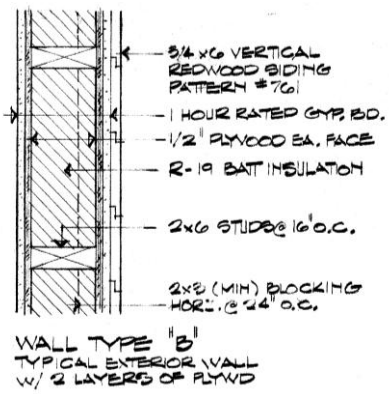

Figure 13: Exterior Wall Section

Figure 14: SE wall with storage closet

Many of the roof/wall intersections, especially on the southwest side of the buildings, showed evidence of peeled paint. Based on homeowner reports of water intrusion at exterior storage closets, a roof/wall intersection at one of the storage closets was selected for further investigation (Figure 15~~Figure 15~~).

Figure 15: Investigation of SE wall

Figure 16: Investigation at roof/wall connection

Upon removal of the siding, it was observed that the exterior gypsum board was water damaged along the sloped intersection of the wall and the roof. The exterior gypsum board was crumbling at the roof/wall connection. For several inches above the connection, the outer paper surface of the gypsum board was peeling away but the gypsum core remained intact. The plywood wall sheathing behind the gypsum board appeared undamaged. The water damage was more extensive towards the outer edge of the roof.

It was observed that the roof underlayment was turned up several inches and sealed to the exterior plywood wall sheathing. The connection between the metal deck and the wall sheathing was covered with a continuous bent sheet metal flashing. The sheet metal flashing was noted to be flashed back to the plywood wall sheathing. This places the flashing behind the exterior gypsum board (See Figure 16~~Figure 16~~).

30 Forest Street | Somerville, MA 02143 | Phone 978.589.5100 | Fax 978.589.5103 | www.buildingscience.com

Figure 17: Investigation at wall/wall connection

Figure 18: Investigation at base of wall

The investigation was continued at this location by removing the siding down along the wall-to-wall connection at the exterior of the storage closet. Here, the exterior gypsum board was water damaged and crumbled. This extended out approximately 12" from the wall-to-wall intersection. Since the plywood sheathing showed water staining, a cut was made in the plywood to investigate the wall structure. No damage to the studs was evident at this location (See Figure 17~~Figure 17~~).

The siding was then removed at the base of this exterior wall. Here extensive damage was observed with both the exterior gypsum board and the plywood crumbling and evidence of rot along the outside edge the wall studs and sill plates (See Figure 18~~Figure 18~~). Note that at this location, the concrete foundation wall and sill plate is proud of the siding; metal flashing covers the extension. The flashing was noted to be sloped backwards in many locations directing water up against the building.

All of the siding that was removed at this location was in excellent condition. It had originally been primed on all sides and there was no sign of water damage.

It should be noted that the first floor decks on the southwest side of the buildings were originally constructed as cantilevered structures. There was water damage reported in the past at the decks –all the original stairs were removed because of damage – and damage can be seen to the some of the structure underneath. (See Figure 19~~Figure 19~~) In some cases, homeowners have added support underneath suggesting that the original decks may be sagging. (See Figure 20~~Figure 20~~)

30 Forest Street | Somerville, MA 02143 | Phone 978.589.5100 | Fax 978.589.5103 | www.buildingscience.com

Figure 19: SW porch deck

Figure 20: SW porch with added "support"

Some homeowners have added decks at the second floor on the southwest side. By doing so, they replaced the original roof structure at the exterior storage closets below. Figure 21~~Figure 21~~ shows an example of this.

It was reported that there has been water intrusion in the storage closets with modified construction as well as in the original construction. Therefore a disassembly investigation was performed at the wall along one such deck. (See Figure 22~~Figure 22~~) In this case, the original side-wall was extended up to form a wing wall for the 2nd floor deck. Siding was removed from the wing wall to check for water damage which can be seen on the exterior gypsum board at several places (Figure 23~~Figure 23~~). A cut was made through the plywood in the building wall at the connection point to see if the water damage extended into the wall. There was dampness felt in the stud space, but no damage to the stud could be seen (Figure 24~~Figure 24~~).

Figure 21: Example of deck over storage closet

Figure 22: SW porch with added

Figure 23: Wing wall built over existing structure

Figure 24: Wing wall attachment to building

The next field disassembly was located at a roof/wall intersection along the northeast side of the building (Figure 25~~Figure 25~~). The siding was removed so the condition of the wall could be examined (Figure 26~~Figure 26~~). There was some water staining on the face of the exterior gypsum board causing peeling of its outer layer but the core was not damaged. The gypsum board was broken off to look at the plywood behind, which was not damaged. The roof/wall flashing detail was similar to that described earlier.

Figure 25: Investigation at NE wall at roof/wall

Figure 26: Detail at roof/wall

Additional investigation openings were made at two locations – in the wall field on a northeast wall and on a southeast wall. At the location on the northeast wall, when the siding was removed, some water stains could be seen on the face of the exterior gypsum board at siding nail penetration and around the windows, but there was no deterioration (See Figure 27~~Figure 27~~). It should be noted that there is no overhang over this wall. On the other hand, along the southwest wall, where there is an overhang, no water staining of the exterior gypsum board was observed (See Figure 28~~Figure 28~~).

Figure 27: Investigation at NE wall (field)

Figure 28: Investigation at SW wall (field)

The windows from the original construction are still in place. They are double glazed windows and some are reported to be experiencing condensation within the glazing. The siding was removed at a window on the southwest side of the building (on a southeast facing wall) and at a window on the northeast side of the building to check for water damage around the windows (See Figure 29~~Figure 29~~ and Figure 30~~Figure 30~~). In both cases, the windows are on walls for which there is no overhang. There was no flashing observed at the windows. There was some water staining on the exterior gypsum board around both of the windows and on the plywood behind. The plywood was cut at the window on the northeast side to check for damage inside the wall, but none was observed.

Figure 29: Investigation at window (SE wall)

Figure 30: Investigation at window (NE wall)

Crawlspace

The crawlspace is a ventilated, insulated space (See Figure 31~~Figure 31~~). Crawlspace vents were observed along the northeast façade and are also called out in the drawings to be located on the southwest under the first floor porches. The framing and the first floor subfloor are exposed. There is no insulation between the first floor and the crawlspace (See Figure FS-3). Each unit contains its own water heater and heating is provided by electric baseboard. So there is no equipment in the crawlspaces other than plumbing and wiring. During the survey, the crawlspace was not damp nor did it smell musty.

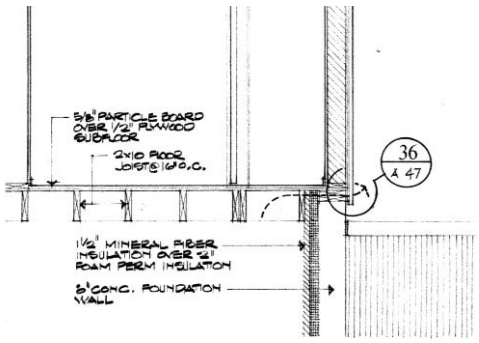

Figure 31: Basement Ventilation Section

Figure 32: Exterior Basement Vents

How does the detail in Fig 31 provide for crawl ventilation? There is no vent shown, just a double sill plate on top of a concrete wall? I has thought the vents exist at the rims… but this Fig would actually indicate there is no viable ventilation pathway at the grill shown in Fig 32 is through the siding only with no connection to the crawl.]

In general, the subfloor and framing was clean and free of water staining. However, there was occasional evidence of condensation. This can be seen on the blocking above plumbing pipes in Figure 33~~Figure 33~~. There was also evidence of condensation along the rim joist (See Figure 34~~Figure 34~~). No structural water damage was observed on the floor framing or on any portions of the rim board that were examined. [This conflicts with the photos provided by REG.]

30 Forest Street | Somerville, MA 02143 | Phone 978.589.5100 | Fax 978.589.5103 | www.buildingscience.com

Figure 33: Piping in Basement

Figure 34: Rim board

The walls of the crawlspace are insulated with a layer of XPS against the concrete foundation wall which is covered with a blanket of fiberglass insulation. The crawlspace floor has a continuous ground cover of polyethylene. The ground cover is sealed to the footing at the interior columns (Figure 37~~Figure 37~~) and is sealed to the XPS at the walls (Figure 38~~Figure 38~~).

[In these photos, it appears xps was extended up to block the foundation vents, which is also what I observed. Please edit the section on crawl space venting to include language that venting is blocked.

Another construction detail that should be noted in this section is the lack of flashing at any building penetration. This is only noted in reference to selected windows, but in fact (per the plans) there is no flashing at any penetration (vents, windows, doors) and only at roof/wall intersections and the bottom of wall. Also, is BSC OK with the roughly 6" tall flashing at roof/wall connections? If not, I would think it should be noted this is less flashing than would be expected in a mountain climate.]

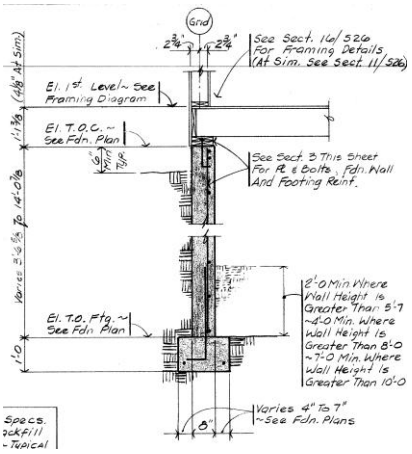

Figure 35: Foundation wall

Figure 36: Foundation wall insulation

30 Forest Street | Somerville, MA 02143 | Phone 978.589.5100 | Fax 978.589.5103 | www.buildingscience.com

Figure 37: Poly ground cover at lally column

Figure 38: Poly ground cover sealed to wall insulation

Additional information provided from REG did indicate areas where the sill plates and floor joists were observed to be stained and in some cases deteriorating. In addition some areas of the crawl were also noted to have insulation installed in the floor joists. The insulation appeared dirty and black.

30 Forest Street | Somerville, MA 02143 | Phone 978.589.5100 | Fax 978.589.5103 | www.buildingscience.com

Figure 39: Deteriorating sill plates in 300 building crawl (photo courtesy of REG)

Figure 40: Deteriorating sill plates in 300 building crawl (photo courtesy of REG)

Figure 41: Water staining on LVL beam (photo courtesy of REG)

Figure 42: Insulation falling out of floor joists (photo courtesy of REG)

Analysis

The problems identified in these buildings are caused primarily by water intrusion at certain locations in the exterior wall assemblies. Some secondary concerns were noted that related to condensation accumulation.

Attic~~/Roof~~

The design of the buildings specifies ventilated attics. In cold climates, the primary purpose of attic ventilation is to maintain a cold roof temperature to control ice dams and to vent moisture that moves from the conditioned space to the attic. Attic ventilation is primarily driven by stack effect, and therefore requires both lower openings as well as higher openings to allow for flow. The amount of flow is a function of the size of the openings and the vertical distance between them.

In terms of moisture control, in order for the attic ventilation to be effective, the rate of moisture removal from the attic must exceed the rate of moisture leakage into the attic.

30 Forest Street | Somerville, MA 02143 | Phone 978.589.5100 | Fax 978.589.5103 | www.buildingscience.com

Each attic space is designed to have two wall attic vents and a venting chimney with a 1-hour rated attic floor system separating the unit below from the attic. The area of lower wall vents is insufficient to provide for adequate ventilation of the attic. In addition, the design of the ceiling leaves a large potential for air leakage from the conditioned space into the attic. A clearly observed and significant gap is around the non-gasketed pull down attic access hatch. However, there are likely other pathways as well such as around light and electrical fixtures, at the top plates of partition and exterior framed walls. In addition to the air leakage from the interior space, there is concern relating to moisture loading of the attic from bathroom fans and dryer exhaust (as was observed in the unit investigated).

The resulting moisture load is greater than can be managed by the ventilation scheme. As a result, condensation accumulates at various places on sheathing and framing at the exterior surfaces.

[These comments seem to only address the attic. Additional roof comments: adequacy of short flashing at roof/wall intersection? Is an eave required/suggested at rake walls? Is the existing eave extension at the end of roof slopes sufficient? Possibly create a roof section? There are some roof related comments in the exterior wall section…]

Exterior Walls

The exterior walls are showing wide range of conditions. The areas investigated by BSC during the field visit of June 30, 2010 seemed to be performing to a moderate level with some surface material deterioration but with little damage to the underlying structure in most locations. These observations do not correlate with the observations of REG during the retrofit of units 314/316. The damage noted during the renovation was extensive with significant deterioration to the sheathing elements and structural framing. The damage was reported to be pervasive enough to require repair to interior partition walls, flooring, and ceiling assemblies.

Water damage of building elements is a function of moisture balance. The rate of wetting must exceed the rate of drying in order for accumulation to occur, and the amount of accumulation must exceed the safe storage capacity of the material in order for damage to occur. Therefore, while pathways for water infiltration into the exterior wall assemblies do exist on the buildings, damage will only occur provided that sufficient water volume is able to penetrate into the system and provided the water cannot be drained to the exterior or dried out effectively.

Figure 43: Rake edge at end wall and eave overhang extension

There were three primary locations where the system had noted problems.

- Wall to lower sloped roof connections
- Second floor balcony additions
- Window systems

30 Forest Street | Somerville, MA 02143 | Phone 978.589.5100 | Fax 978.589.5103 | www.buildingscience.com

Wall to Lower Sloped Roof Connection

The most severe area of damage noted during the investigation was related to the wall to lower roof interfaces that terminate in the field of the wall. The main problem stems from the roof to wall flashing being installed behind the exterior gypsum layer and the lack of kick out flashings at the termination of the sloped roof in the field of the walls.

Water management of the enclosure in the Aspen environment requires a system that not only addresses rainwater penetration but also handles potential for water accumulation created by the formation of ice dams.

Because the flashing was installed behind the exterior gypsum board layer it created a hole at the roof edge termination in the field of the wall. This hole funneled water that was draining down along the flashing in between the gypsum and plywood sheathing. The location was particularly susceptible to water infiltration due to ice dams. The ice dams created a situation that allowed the water to back up above the height of the lower flashing leg and subsequently drain into the wall assembly. This analysis was corroborated with the reported history of the building that identified problems occurring more often during times of ice damming.

The problem appeared to be more severe on the Southeast elevations than the Northwest elevations. It was theorized that this may be due to the solar exposure of the South East roofs leading to more solar heating and subsequent cyclical melting and freezing of water at the ice dam formations. The Northwest elevations are more shaded reducing the melting potential of the roofs.

The leakage at the roof to wall connections is resulting in damage of the first floor structure where the wood frame structure is connected to the concrete foundation. The buildings are designed with the framing set back from the exterior edge of the foundation wall (Figure 44~~Figure 44~~). This created a ledge for the water to accumulate at the base of the wall assembly. Removal of the siding material at the base of the southeast facing wall during the field investigation revealed that the framing had deteriorated (Figure 45~~Figure 45~~).

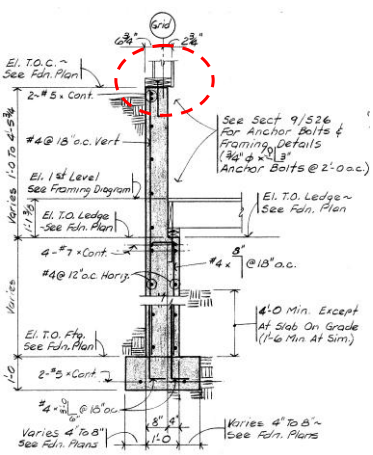

Figure 44: Foundation wall section

Figure 45: Base of wall at foundation wall ledge

Second Floor Balcony Additions

The addition of the exterior second floor decks was reported to have been done over several years with no specific details used for the construction. It was stated that the design and construction was typically left up to the contractor performing the work. This creates a situation where the actual construction could be variable at each location.

At the deck interface that was reviewed, no saddle flashings or other water proofing was installed at the wall to wing wall interface or below the wood trim.

30 Forest Street | Somerville, MA 02143 | Phone 978.589.5100 | Fax 978.589.5103 | www.buildingscience.com

Without water proofing or flashing installed at the balcony wing walls, water is able to penetrate directly into the structure below. The removal of the wood siding at the wing wall to structural wall interface revealed a concentration of deteriorated material at the interface.

Window Systems

Since the windows are original to the building and no flashing was applied when they were installed, there is potential for water intrusion at each the windows. Based on the observed water staining of the exterior gypsum board around the windows, some water is getting behind the cladding at the windows; however the observed damage was not extensive around the openings.

The current condition of the windows in the rough openings is a function of the amount of water reaching the windows. The windows on walls that have overhangs are less likely to show water intrusion than those that are on walls without overhangs or those that are exposed to additional water from nearby roof drainage.

A secondary concern was noted with the window systems. The evidence of sealed unit failure as noted by the condensation accumulation between the two lites of the insulating glass units is an indication of the insulating glass units sitting for prolonged periods of time in water. This is an indication that water is getting past the exterior seals and being held in the glazing pocket. This creates a concern of water leakage occurring through the window frame itself and not just at the window to wall interface. Without a pan flashing installed below the window there is a risk of water infiltration into the building.

[Include comments on lack of flashing for other penetrations.]

Crawlspace

The design of the crawlspace of the buildings is for a ventilated but insulated space with no insulation in the first floors of the living space. The polyethylene ground cover is sealed to the wall insulation and around the discontinuities at the support columns. The space appears to have functioned well with only a slight evidence of condensation.

Ventilation of this crawlspace is unnecessary and creates a discontinuity in the thermal enclosure of the buildings. In addition, the ventilation and any other air gaps that exist along the top of the wall may be the source of the moisture. In the winter, any air brought in by the ventilation will make the basement cooler than the space above. In the summer, outdoor air brought in will tend to be more humid. [Ventilation is required by code, and not provided for these buildings. Given the minor but consistent evidence of 'condensation stains' or mold on the joists, does it seem prudent to leave these spaces unventilated?---- I see below you are recommending ventilating the crawl by pulling conditioned air down and out. That certainly will work for the crawl, but by depressurizing the living space above is there any greater concern of pulling moisture into the wall assemblies?]

There was very little evidence of past liquid water intrusion into the crawl space through the foundation wall. The polyethylene ground cover is turned up and sealed it to the interior face of the rigid wall insulation. In this configuration, any water infiltration though the foundation wall would be directed under the polyethylene ground cover. Therefore any water infiltration would likely have had to come from the wood framed walls above, and would not be considered a crawlspace issue.

Recommendations

The following is a list of potential strategies that may be employed to address the concerns identified with the performance and durability of the building enclosure assemblies. The intent of this section is to provide sufficient information regarding the scope of work needed to repair the buildings that can be provided to a cost estimator for overall project budgeting purposes. Due to the unknown amount of deterioration of the building components, BSC and REG have worked together to develop two sets of damage estimates (representing what we feel to be the best case and worst case scenarios). The purpose of this exercise is to bracket the potential costs that may be associated with the rehabilitation of the buildings.

The work has been broken down into the following categories:

~~1216:0:.~~1. Attic/Roof
~~1432:0:.~~2. Exterior Walls
~~1648:0:.~~3. Windows and Patio Doors
~~1864:0:.~~4. Crawlspace
~~1080:0:.~~5. Cantilevered Decks

Formatted: Bullets and Numbering

30 Forest Street | Somerville, MA 02143 | Phone 978.589.5100 | Fax 978.589.5103 | www.buildingscience.com

Attic~~/Roof~~

There are two proposed strategies that could be employed to reduce the potential for condensation from occurring in the attic spaces:

Option 1: Increase ventilation and air seal the attic floor

This strategy would try to increase the ventilation rate for the attic as well as reduce the infiltration of conditioned air into the attic from the living space below. The following is an outline scope of work:

~~1216:0:.~~1. Add additional lower vent openings, including soffit vents at the eave overhang extensions. Ensure existing vents are open.
~~1432:0:.~~2. Replace pull down ladder access hatched with gasketed and sealed hatches (a secondary hatch cover should also be considered given the high potential for infiltration through the attic hatch).
~~1648:0:.~~3. Air seal gypsum ceiling at all partition walls, electrical and mechanical penetrations, and exterior framed wall. This will require the removal of any plywood attic flooring and moving blown in insulation in order to expose the ceiling gypsum from the top.

Formatted: Bullets and Numbering

Additional strategy options:

~~1216:0:.~~1. Mechanically induce attic ventilation through the use of fan. The fan should be positioned to blow exterior air into the attic space. DO NOT exhaust air from the attic space as this may result in an increase of infiltration of conditioned air into the attic.

Formatted: Bullets and Numbering

Option 2: Modify the attic to be an unvented attic

This strategy would add air impermeable insulation to the underside of the roof sheathing as well as the end walls bringing the attic within the thermal and air tightness boundary of the units. The following is an outline scope of work:

~~1216:0:.~~1. Close and seal all vent openings to the exterior
~~1432:0:.~~2. Close and block the vent shaft and re-flash the top to prevent wind blown rain from being able to infiltrate into the vent shaft.
~~1648:0:.~~3. Install a layer of closed cell spray polyurethane foam to the underside of the roof deck (Minimum thickness to meet R-30 based on *Table R806.4 Insulation for Condensation Control* of the 2009 IRC). Add additional insulation (such as netted and blown cellulose) in sufficient thickness to meet the minimum thermal resistance by the local building code. [Please be specific for both thickensses, this is for the purposes of cost estimating.]
~~1864:0:.~~4. Install a layer of closed cell spray polyurethane foam to the end walls. [Specify thickness.]
~~1080:0:.~~5. If required cover the foam with an approved thermal or ignition barrier. [Specify if required or not.]

Formatted: Bullets and Numbering

Additional recommended work

The following additional work is recommended independent of either option chosen:

~~1216:0:.~~1. Ensure all dryer exhaust ducts are properly ducted to the exterior. Seal around all connections to prevent leakage of dryer exhaust into the attic space. [Add flashing?]
~~1432:0:.~~2. Duct all bathroom exhaust fans properly to the exterior. [Add flashing?]

Formatted: Bullets and Numbering

Exterior Walls

To correct the concerns relating to water intrusion, the damage areas need to be repaired and the details leading to the water intrusion problems should be modified to prevent future infiltration. The following outline scope of work should be used for the repair.

~~1216:0:.~~1. Remove all of the cladding materials to expose underlying exterior wall sheathing.
~~1432:0:.~~2. Remove any water damaged sheathing material and framing (material that has lost its structural capacity or is friable would be considered damaged. Surface stained material with no loss of structural capacity can remain in place)
~~1648:0:.~~3. Remediate any mold discovered (procedures for mold remediation are outside of this scope, however we feel that it would not be necessary to investigate wall cavities behind exterior sheathing areas that are not exhibiting signs of water damage from the exterior – only cavities that are exposed due to the removal of water damaged material need to be remediated) [As we discussed in each of our phone calls, mold remediation protocol is in the scope of this study. This is a crucial element to determining cost, guidelines need to be provided for adequate pricing. Contractors and estimators both need to know what level of remediation is required: are special teams

Formatted: Bullets and Numbering

required for removal (as was done for interior work at 314), will testing be required to verify mold removal (if so how many visits by testing specialist), when to clean a material, how to clean it, when to encase observed mold (i.e. leave it behind), how to encase it, when materials must be removed etc. This is the largest area of cost variability and has to be addressed for the HOA to have an understanding of the total cost of this project.]

1864:0:.4. Replace damaged material with new.

1080:0:.5. Install new building wrap over the exterior wall assemblies.

13296:0:.6. Install a drainage space (1x4 wood furring at 16" OC, 3/8" XPS fanfold (cut into 2" strips) at 16" OC, or homeslicker by Benjamin Obdyke)

10512:0:.7. Install new cladding.

There are significant unknowns as to the amount of damage that may be uncovered during the retrofit. In order to bracket the potential project cost differences we have developed the following specific location repair scopes as well as estimated quantities of damaged material (intended to be our best estimate of best and worst case scenarios). These quantities can be referenced when developing construction cost estimates.

Wall Structure Repairs (All percentages represent portions of total wall area)		
Replace damaged exterior gypsum	650%	10%
Replace damaged exterior plywood*	2535%	5%
Replace wall studs	1525%	3%
Replace batt insulation	1525%	3%
Replace interior plywood	5%	1%
Replace interior gypsum**	5%	1%
* these same quantities may be used for estimating of mold remediation of exterior wall cavities		
** where interior gypsum is replaced budget for repainting of entire interior wall		

First floor - floor framing (All percentages represent portions or total perimeter length)		
Replace damaged double 2x8 sill plate	50%	5%
Replace damaged double 2x10 rim boards	50%	5%
Repair damaged 2x10 floor joists (assume 2' splice needed to repair damaged joist ends)	25%	3%
Replace damaged 1/2" plywood and 5/8" particle board sub floor* (assume 2' in from exterior wall for every lineal foot of perimeter)	25%	3%
*where subfloor repair is done, budget to replace carpet in affected room		

Second floor - floor framing (All percentages represent portions or total perimeter length)		
Replace damaged double 2x8 sill plate	25%	3%
Replace damaged double 2x10 band joist	25%	3%
Repair damaged 2x10 floor joists (assume 2' splice needed to repair damaged joist ends)	12%	2%
Replace damaged first floor ceiling gypsum (assume 2' in from exterior wall for every lineal foot of perimeter)	12%	2%
Replace damaged 1/2" plywood and 5/8" particle board sub floor* (assume 2' in from exterior wall for every lineal foot of perimeter)	12%	2%

	*where subfloor repair is done, budget to replace entire flooring in affected room		

Third floor - floor framing (All percentages represent portions or total perimeter length)			
	Replace damaged double 2x8 sill plate	12%	2%
	Replace damaged double 2x10 band joist	12%	2%
	Repair damaged 2x10 floor joists (assume 2' splice needed to repair damaged joist ends)	6%	1%
	Replace damaged ceiling gypsum (assume 2' in from exterior wall for every lineal foot of perimeter)	6%	1%
	Replace damaged 1/2" plywood and 5/8" particle board sub floor* (assume 2' in from exterior wall for every lineal foot of perimeter)	6%	1%
	*where subfloor repair is done, budget to replace carpet in affected room		

As part of the scope, interfaces with other building elements are recommended to be modified to maintain the continuity of the water management system. Please see attached detail sheets for direction on the repair of the building interfaces.

Window and Patio Door Systems

The windows and sliding glass patio doors should be removed and replaced. The replacement units are recommended to have a maximum U-Value of 0.35 as per the 2009 IECC. The units should be installed in a pan flashed and drained manner

that is properly integrated with the new WRB installed on the walls. Please see the attached window installation details (note - sliding glass patio doors would be installed using the same approach).

Crawlspace

We would recommend that the existing vents be sealed and the space operated as a conditioned crawlspace. In order to mitigate the potential for air infiltration from the crawlspace into the living spaces above, a strategy would be to install a fan to exhaust air from the crawlspace to the exterior. This will depressurize the crawlspace with respect to the living spaces above. The benefit of the net air flow being from the conditioned space into the crawl will be prevention of pollutants from migrating into the living spaces from the crawlspace as well as some heat transfer to the crawlspace to help protect against freezing of the pipes. From experience we would recommend approximately 50cfm of exhaust for every 1000 square feet of crawlspace.

Cantilevered Decks

The framing of the cantilevered decks is deteriorating in many locations. Damaged deck material should be replaced. In addition, the foundation support for each porch should be reviewed and modified as necessary. [Provide an estimate range here as well- 25% to 75%? Seems like most decks have damage, and once they are opened up for repair saving existing material may be more costly than replacing…]

24